AS22 Series

Differential Pressure Sensor Module

AS22 Series is a perfect silicon pressure sensor module offering a ratiometric analog interface for reading differential pressure over the specified full scale pressure span and temp. range.

The AS22 Series incorporates a silicon piezoresistive pressure sensor chip and an interior signal-conditional Application Specific Integrated Circuit(ASIC) in a SOP8 package with two air vents, which can be mounted directly on a standard PCB.

The AS22 Series is fully calibrated and temperature compensated for offset, sensitivity, temperature and non-linearity, so AS22 Series pressure sensor module satisfy the perfect repeatability, linearity, stability and sensibility, which can be applied directly in medical equipment, fitness machine, home electronics, and other pneumatic devices etc.

AS22 Series pressure sensor module is for high volume application at an affordable cost and perfect performance.

Customized calibrations (working voltage, output voltage, and pressure range) are available.



Major features

-5kPa ~ 0kPa…5kPa...200kPa(more range as below mention)

Optional 5V or 3.3V or 3V power supply

Differential Type (Positive & Vacuum type)

For Non-corrosive gas or air

Calibrated Amplified Analog signal or Digital output

Temp. Compensated:0℃～+60℃

Direct application, Low Cost

Applications

For Medical and healthy equipment field, such as Ventilators/ breathing machine/ respiration, CPAP(Continuous Positive Airway Pressure), Sleep Apnea, Spirometers, Gas flow instruction, Air flow monitor, hospital bed etc,.

For Industrial field, such as Airflow measurement, HVAC and Pneumatic gauges, Gas flow Instrumentation, Exhaust system, Pressure switches, Liquid level measurement, etc.

For other fields, such as sport equipment, Fire protection, Biological Science, Consumer appliances application etc.

Performance Parameter

Unless otherwise specified, measurements were taken with a supply voltage of 5 Vdc at a temperature of 25±1℃ and humidity ranging from 25 % ～85 % RH

Item	Data	Unit
Power Supply	5(or 3.3 or 3)	V
Max. Excitation current	3	mA
Output Signal	0.5-4.5(or 0.2-2.7 or customized)	V
Accuracy	±2.5	%Span
TCO(Temp. Coefficient of Offset)	±0.03	%FS/℃
TCS(Temp. Coefficient of Span)	±0.03	%FS/℃
Long Term Stability(1year)	±0.5	%Span
Over Pressure	2X	Rated
Compensation Temp.	0 ~ 60/32 ~ 140	℃/℉
Ambient Temp.	-10 ~ 85/14~ 176	℃/℉
Storage Temp.	-40 ~ 125/-40 ~ 257	℃/℉

Pressure Range (100kPa=0.1MPa=1bar≈14.5 Psi)

Pressure Range（Pa）	Model
-500 ～500	AS22A005HPGPN
-1000 ～1000	AS22A010HPGPN
-2500 ～2500	AS22A025HPGPN
-5000 ～5000	AS22A050HPGPN
Available for more custom pressure range	

Dimension & Recommended Footprint (Unit:mm)

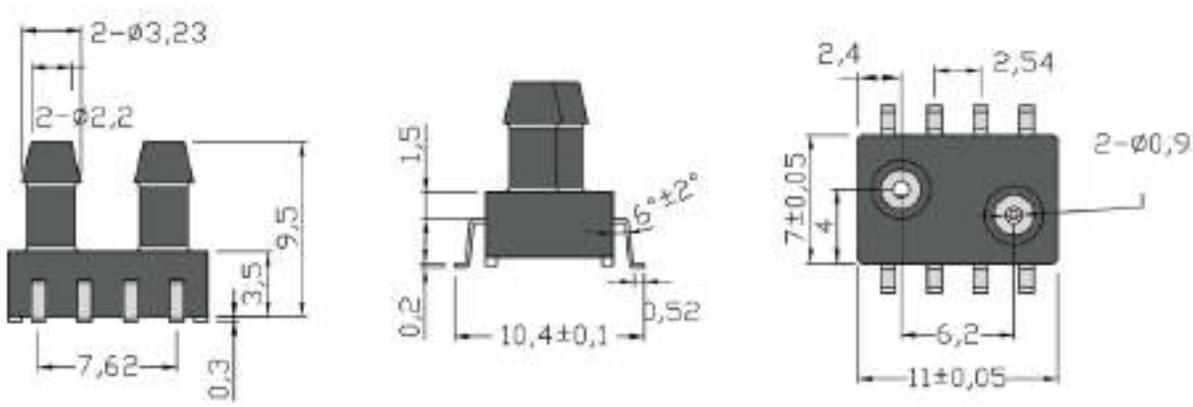

Electric Connection

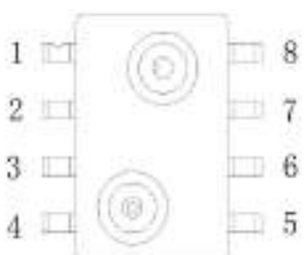

Type	1	2	3	4	5	6	7	8
Analog	N/C	Vdd	Vout	N/C	N/C	N/C	N/C	GND
I2C	N/C	Vdd	N/C	N/C	N/C	SDA	SCL	GND

NOTE: **1.** N/C Pins must be left floating **2.** Soldering of lead Pins:250'C for 5 sec max.
3. Please add 0.1uf capacitor between Vdd and GND

Ordering Guide

AS22 -A-100-HP-G

Model Family

AS22 Series

Output Signal

- A: Analog(0.5-4.5V)
- D: I2C

Pressure Type

- G:Gauge
- GN:Negative
- GPN:P+N

Pressure Unit

- MP：mPa
- KP：kPa
- HP:hPa

Pressure Range

- 000-999

NOTE: **1.** Implement ESD protection during soldering and assembly. **2.** Overload voltage(6.5Vdc) or current(5mA) may burn the ASIC. **3.** The medium must be compatible with the pressurized parts. **4.** Please contact us for special request on parameter and application.

Overall Notes:

Mounting

Adopting land on the PC board for ensuring the sensor is securely fixed.

Soldering

Due to its small size, the thermal capacity of the pressure sensor is low. Therefore, take steps to minimize the effects of external heat. Damage and changes to characteristics may occur due to heat deformation. Use a non-corrosive resin type of flux. Since the pressure sensor is exposed to the atmosphere, do not allow flux to enter inside.

- **Manual soldering**
- Raise the temperature of the soldering tip between 260 and 300°C/500 and 572°F (30 W) and solder within 5 seconds.
- The sensor output may vary if the load is applied on the terminal during soldering.
- Keep the soldering tip clean
- **DIP soldering (DIP Terminal)**
- Keep the temperature of the DIP solder tank below 260°C/500 and solder within 5 seconds.
- To avoid heat deformation, do not perform DIP soldering when mounting on the circuit board which has a small thermal capacity.
- **Reflow soldering (SMD Terminal)**
- The recommended reflow temperature profile conditions are given below.

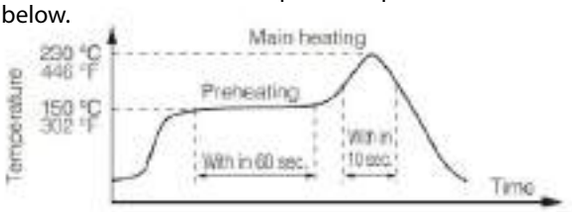

- We recommend the screen solder printing method as the method of cream.
- Please refer to the recommended PC board specification diagram for the PC board foot pattern.
- Self alignment may not always work as expected, therefore, please carefully the position of the terminals and pattern.
- The temperature of the profile is assumed to be a value measured with the printed wiring board of the terminal neighborhood.
- Please evaluate solderability under the actual mounting conditions since welding and deformation of the pressure inlet port may occur due to heat stress depending on equipments or conditions.
- **Rework soldering**
  - Complete rework at a time.
  - Use a flattened soldering tip when performing rework on the solder bridge. Do not add the flux.
  - Keep the soldering tip below the temperature described in the specifications.
- Avoid drop and rough handling as excessive force may deform the terminal and damage soldering characteristics.
- Keep the circuit board warpage within 0.05 mm of the full width of the sensor.
- After soldering, do not apply stress on the soldered part when cutting or bending the circuit board.
- Prevent human hands or metal pieces from contacting with the sensor terminal. Such contact may cause anomalous outlets as the terminal is exposed to the atmosphere.
- After soldering, prevent chemical agents from adhering to the sensor when applying coating to avoid insulation deterioration of the circuit board.
- Please consult us concerning leadfree soldering.

Wire Connection

- Correctly wire as in the connection diagram. Reverse connection may damage the product and degrade the performance.
- Do not use idle terminals to prevent damages to the sensor.

Cleaning

- Since the pressure sensor chip is exposed to the atmosphere, do not allow cleaning fluid to enter inside.
- Avoid ultrasonic cleaning since this may cause breaks or disconnections in the wiring.

Environment

- Please avoid using or storing the pressure sensor chip in a place exposed to corrosive gases (such as the gases given off by organic solvents, sulfurous acid gas, hydrogen sulfides, etc.) which will adversely affect the performance of the pressure sensor chip.
- Since this pressure sensor chip does not have a water-proof construction, please do not use the sensor in a location where it may be sprayed with water, etc.

- Avoid using the pressure sensors chip in an environment where condensation may form. Furthermore, its output may fluctuate if any moisture adhering to it freezes.
- The pressure sensor chip is constructed in such a way that its output will fluctuate when it is exposed to light. Especially when pressure is to be applied by means of a transparent tube, take steps to prevent the pressure sensor chip from being exposed to light.
- Avoid using the pressure sensor chip where it will be susceptible to ultrasonic or other high-frequency vibration.
- Please keep the sensors sealed using static shielding bags on storage. The PINs of sensor are plated by Ag. If the sensors expose to an atmosphere, the PINs will be black by oxidation.

Quality Check under actual loading conditions

To assure reliability, check the sensor under actual loading conditions. Avoid any situation that may adversely affect its performance.

Other handling precautions

- That using the wrong pressure range or mounting method may result in accidents.
- The only direct pressure medium you can use is dry air. The use of other media, in particular, corrosive gases (organic solvent based gases, sulfurous acid based gases, and hydrogen sulfide based gases, etc.) and media that contains moisture or foreign substances will cause malfunction and damage. Please do not use them.
- The pressure sensor chip is positioned inside the pressure inlet. Never poke wires or other foreign matter through the pressure inlet since they may damage the chip or block the inlet. Avoid use when the atmospheric pressure inlet is blocked.
- Use an operating pressure which is within the rated pressure range. Using a pressure beyond this range may cause damage.
- Since static charge can damage the pressure sensor chip, bear in mind the following handling precautions.
- When storing the pressure sensor chips, use a conductive material to short the pins or wrap the entire chip in aluminum foil. Plastic containers should not be used to store or transport the chips since they readily become charged.
- When using the pressure sensor chips, all the charged articles on the bench surface and the work personnel should be grounded so that any ambient static will be safely discharged. from Based on the pressure involved, give due consideration to the securing of the pressure sensor DIP type and to the securing and selection of the inlet tube.

Safety Precautions

- Do not use these sensors under any circumstances in which the range of their ratings, environment conditions or other specifications are exceeded. Using the sensors in any way which causes their specifications to be exceeded may generate abnormally high levels of heat, emit smoke, etc., resulting in damage to the circuitry and possibly causing an accident.
- Before connecting a connector, check the pin layout by referring to the connector wiring diagram, specifications diagram, etc., and make sure that the connector is connected properly. Take note that mistakes made in connection may cause unforeseen problems in operation, generate abnormally high levels of heat, emit smoke, etc., resulting in damage to the circuitry.
- Do not use any pressure sensor which has been disassembled or remodeled.
- Protection circuit recommended.

  The possible failure mode is either open or short of the output transistor. An excess heat is the cause for short mode failure. For any important and serious application in terms of safety, add protection circuit or any other protection method.
- Various safety equipment
- Safety equipment Traffic light
- Security crime prevention equipment
- Equipment concerning control and safety of trains, cars, etc.
- Applications such as temperature control using sensor output etc.
- If it is expected that malfunction of each sensor may cause injury to persons or serious expansion damage, be sure to implement safety measures such as double safety circuit.

Due to continuous development of our products technical information's are subject to change.
Please ensure the compatibility between the measured medium and the contacting part of the product when placing an order.

ACT Sensors reserves the right to make any change in this datasheet without notice. The information provided is believed to be accurate and reliable as of this product sheet.

Contact factory for customization

ACT SENSORS PVT. LTD.
Your Engineering Partner...
GNP Galaxy, Unit No. 28, Ground Floor, Zone-4, Phase -2, Kansai, Ambernath Industrial Area, Kalyan- Badlapur Road, Ambernath(W) – 421 501
www.actsensor.in www.actsensor.net